CAXA0-10AN

10.1" Medical Tablet for Mobile Healthcare



Features

- 10.1", Intel® Alder Lake-N processor N-Series
- IEC/EN 60601-1 medical compliance
- IEC/EN 60601-1-2 medical compliance
- Windows® 11 IoT Enterprise; Linux (optional)
- Sun light Readable High brightness 800nits LCD display
- Support hot-swap battery
- 15mm ultra slim, 996g light weight, robust design

IP65 Sealing

5 ft 1.5 Drop Test

MIL-STD 810G Certified

Hot-Swap Battery

Barcode Scanner

Specification

System Information	
Processor	Intel® Processor N100 3.4GHz Optional N200 3.7GHz
Memory	Onboard 8GB LPDDR5 Memory Optional 16GB
Storage	256 GB M.2 SSD Optional 512 GB / 1 TB
Display	
Display Size	10.1"
Aspect Ratio	16:10
Resolution & Panel Type	1920×1200 IPS
Brightness	800 nits Sunlight Readable
Audio	
Stereo Speakers	2 × 2 W
Digital Microphones	2
Input	
Touch Screen	10-point PCAP Multi-touch
Touch Mode	Glove / Wet Mode
Physical Control	5 Buttons: Power, Volume ±, 2 Programmable Keys
Camera	
Front	2 MP
Rear	8MP, Auto Focus, Flash
Wireless Communication	
GNSS	GPS / GLONASS / GALILEO
WLAN	Wi-Fi 6E
Bluetooth	Bluetooth® 5.3
4G	Optional Quectel EM060K 4G Module
Security	
Trusted Platform Module (TPM)	Firmware TPM 2.0 Optional Hardware TPM
Physical Security	Kensington Lock Optional Windows® Hello
Software Support	
OS	Windows® 11 IoT Enterprise Optional Linux

Durability	
Rugged Certification	MIL-STD-810G
Drop Resistance	Multiple 1.5 m Drops
Ingress Protection	IP65
Tumble Resistance	1 m Tumble
Impact Resistance	250 g Steel Ball from 50 cm
Screen Protection	Optional Glass Screen Protector
Power	
Backup Battery	7.4 V / 142 mAh / 1.05 Wh
Hot-Swappable Battery	7.68 V / 4170 mAh / 32 Wh
Power Adapter	65 W USB-C PD adapter (20 V / 3.25 A)
Interfaces	
Docking & Connectivity	Docking
USB & Network Ports	USB 3.1 Type-A / Type-C RJ45 GbE
DC Power Input	Replaceable DC Jack
Video Output	Micro HDMI™
Audio Interface	3.5 mm audio
SIM Card Slot	Nano SIM
Storage Expansion	microSDXC
System Reset	Reset hole
Mechanical & Environmental	
Dimension (mm)	283 W × 192 H × 15 D
Weight (g)	996
Sensors / Capture	9-axis MEMS: Accelerometer, eCompass, Gyroscope Ambient Light, Proximity, Optional 1D/2D Scanner
LED Indicator	Power Battery Wi-Fi
Accessories	Optional: 65 W AC adapter Hand / shoulder straps Digitizer pen Vehicle / office docks 4-bay charger 50.1 Wh high-capacity battery

CAXA0-10AN

10.1" Medical Tablet for Mobile Healthcare

Mechanical Drawing

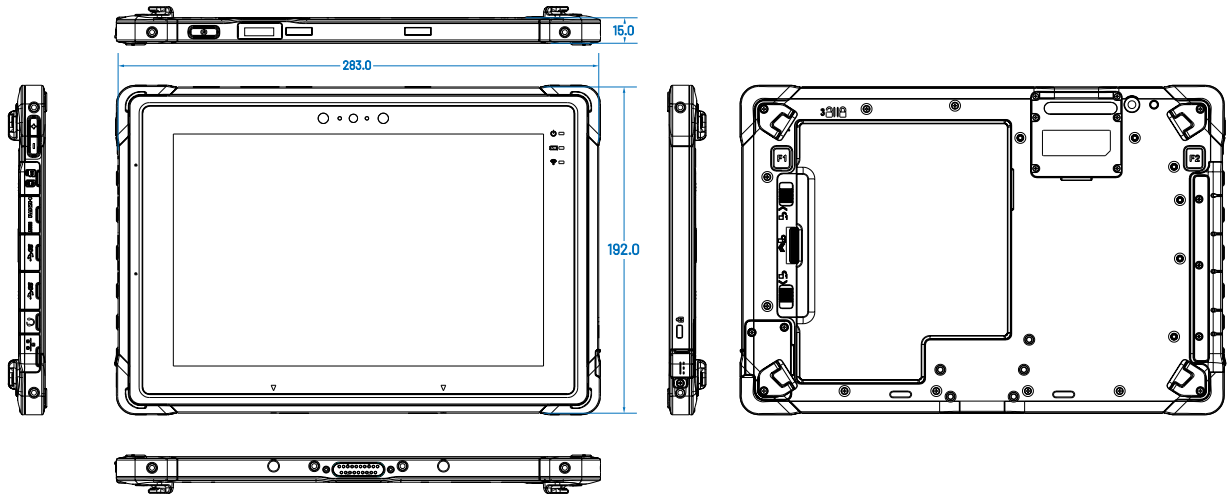

Ordering Information

Part Number	Description
CAXA0-10ANA1-S01R	10.1" 1920x1200 Slim Tablet/**N100**/8GB DDR5/256GB SSD/800nits/WIFI-6E/BT5.3/front 2.0MP,Rear 8MP Camera/Power adapter/Power EU power cord/Win11 IoT
CAXA0-10ANA1-S02R	10.1" 1920x1200 Slim Tablet/**N200**/8GB DDR5/256GB SSD/800nits/WIFI-6E/BT5.3/front 2.0MP,Rear 8MP Camera/Power adapter/Power EU power cord/Win11 IoT
Accessories	**Description**
RCC-CAXA0-4G-01R	Communication 4G Module Quectel LTE-A EM060K series
RCC-CAXA0-BAT-01R	Standard battery 7.68V, 4170 mAh /32Wh for CAXA0-10AN up to 7hrs
RCC-CAXA0-BAT-02R	Extra battery 7.74V, 6460 mAh /50.1Wh for CAXA0-10AN with battery cover up to 10hrs
RCC-CAXA0-BCS-01R	4 Bays Battery Charger station for CAXA0-10AN
RCC-CAXA0-BS-01R	Barcode Scanner Honeywell N6783 (N6703+DB02)
RCC-CAXA0-BSH-01R	Brief case handle for CAXA0-10AN
RCC-CAXA0-DPEN-01R	EETI digitizer pen (B-type) for CAXA0-10AN
RCC-CAXA0-HS-01R	Hand strap for CAXA0-10AN
RCC-CAXA0-KS-01R	NP14 Kick stand with plate for CAXA0-10AN
RCC-CAXA0-ODC-01R	Office docking for CAXA0-10AN with HDMI, 2USB3.0, LAN, Mic-in, Line-out, 2COM, DC in
RCC-CAXA0-PAD-01R	PD in Type C 65W power adaptor for CAXA0-10AN
RCC-CAXA0-SNM-01R	Snap mount quick release body and plate for CAXA0-10AN
RCC-CAXA0-SS-01R	Shoulder strap for CAXA0-10AN
RCC-CAXA0-VDC-01R	Vehicle docking for CAXA0-10AN with HDMI, 2USB3.0, LAN, Mic-in, Line-out, 2COM,DC in
RCC-CAXA0-VSM-01R	VESA mounting plate for CAXA0-10AN

Packing List

Item	Quantity
CAXA0-10AN Tablet	1
PD in Type C 65W power adaptor	1
Power cord	1