	估價圖面
	樣品圖面
●	參考圖面
	承認圖面
	更新圖面

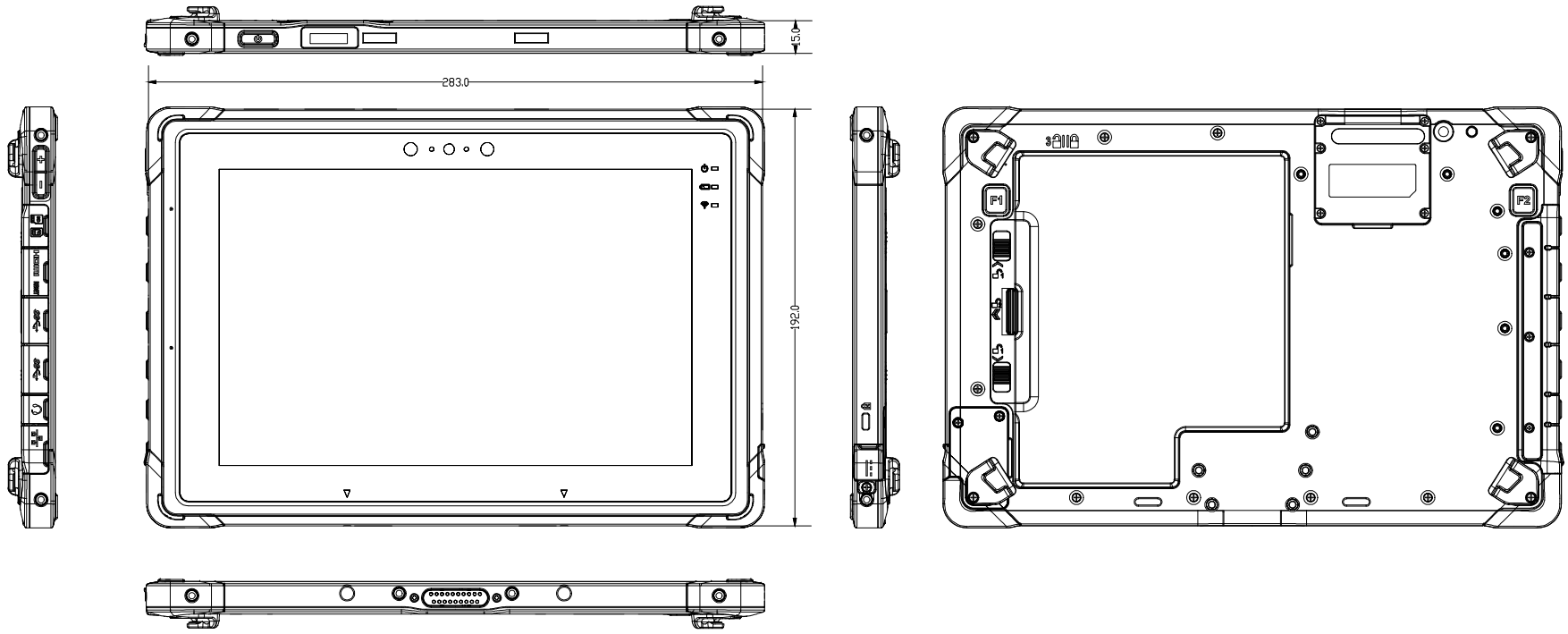

GENERAL TOL.	A	B
>0	±0.1	±0.1
>10	±0.1	±0.2
>50	±0.15	±0.3
>200	±0.3	±0.5
>500	±0.5	±0.8
ANGLE TOL. ±0.5°		

MATERIAL:		PART No.			
SPEC.:		DMR Number			
FINISH:	APPROVED	CHECKED	DESIGNED	DRAWN	
UNIT: MM					
SCALE:1/1					

△E≤ | ≤△L,△a,△b≤

安勤科技股份有限公司
Avalue Technology Inc.

NAME: 系統機構圖

MODEL No. CAXA0-10AN

REV. A1 | SHEET: 1 / 1 | A4